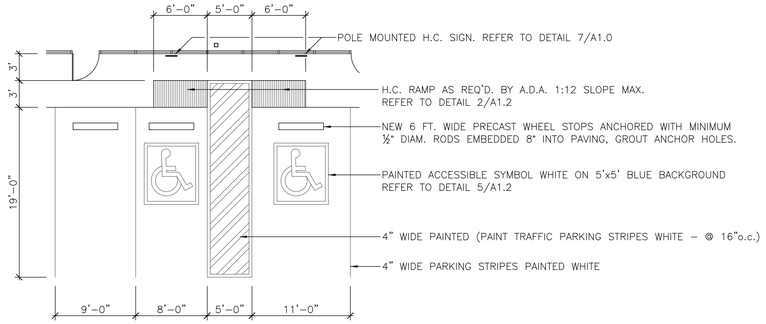

1 A1.2 TYPICAL HANDICAP PARKING SPOT

SCALE: N.T.S.

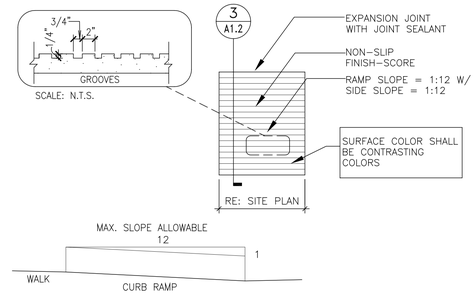

2 A1.2 HANDICAP RAMP DETAIL

SCALE: N.T.S.

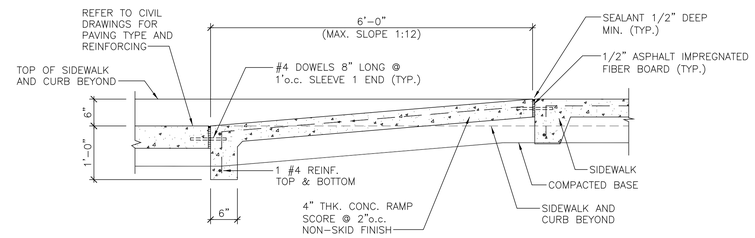

3 A1.2 TYPICAL RAMP SECTION

SCALE: N.T.S.

1. SURFACE TEXTURES OF ACCESSIBLE ROUTE SHALL BE FIRM, STABLE & SLIP RESISTANT.
2. THE SLOPE OF AN ACCESSIBLE ROUTE SHALL NOT EXCEED 1:20, CROSS SLOPES ARE NOT TO EXCEED 1:50
3. SURFACE TEXTURES OF CURB RAMPS TO BE 1/8" DEEP GROOVES 1/4" TO 3/4" WIDE AND 3/4" TO 2" ON CENTER, ARRANGED SO THAT WATER DOES NOT ACCUMULATE.
4. THE FULL WIDTH AND DEPTH OF CURB RAMPS SHALL HAVE A LIGHT REFLECTIVE VALUE AND TEXTURE THAT SIGNIFICANTLY CONTRASTS WITH THAT OF ADJOINING PEDESTRIAN ROUTES.

4 A1.2 A.D.A. REQUIREMENT NOTES

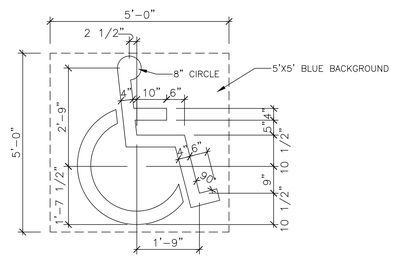

5 A1.2 H.C. SYMBOL

SCALE: N.T.S.

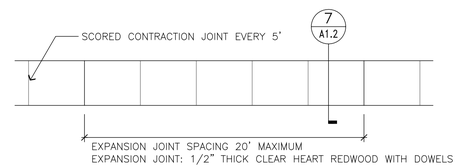

6 A1.2 SIDEWALK JOINT DETAILS

SCALE: N.T.S.

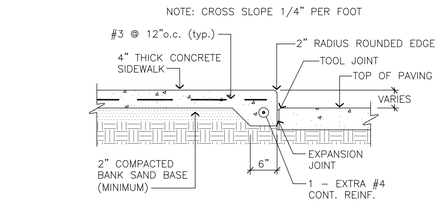

NOTE:
BANK SAND IS DEFINED AS A WELL-GRADED SAND, FREE OF SILT, CLAY, LOAM, FRIABLE OR SOLUBLE MATERIALS AND ORGANIC MATTER, MEETING THE UNIFIED SOILS CLASSIFICATION SYSTEM GROUP SYMBOL SW CRITERIA w/A PLASTICITY INDEX OF < 10, AND NO MORE THAN 12% OF MATERIAL CAN PASS THE No. 200 SIEVE.

7 A1.2 SIDEWALK @ PAVING JOINT DETAIL

SCALE: N.T.S.

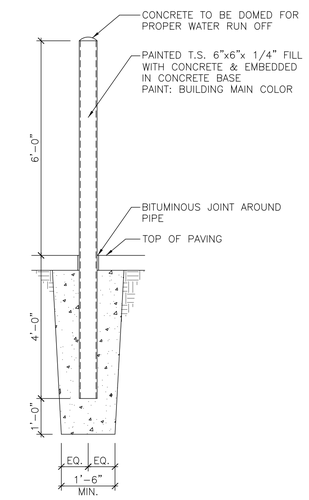

13 A1.2 TYPICAL GATE COLUMN DETAIL

SCALE: N.T.S.

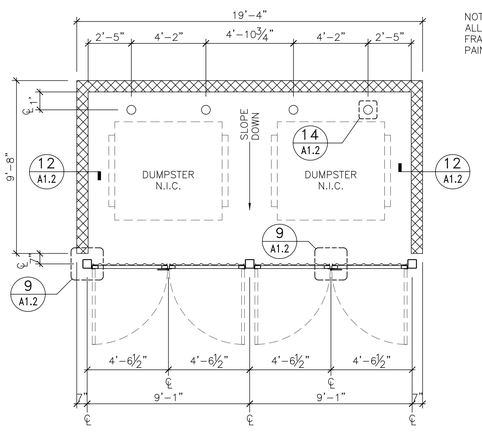

NOTE:
ALL STEEL ANGLES, POSTS, AND FRAMES FOR DUMPSTER SHALL BE PAINTED BUILDING MAIN COLOR

8 A1.2 ENLARGED DUMPSTER PLAN

SCALE: N.T.S.

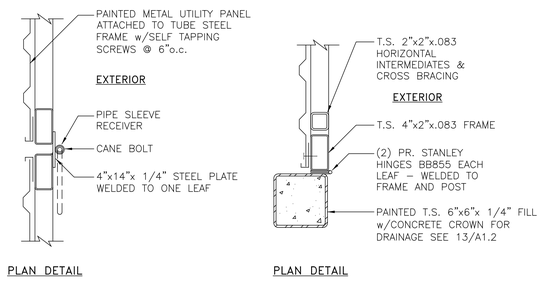

9 A1.2 GATE DETAILS

SCALE: N.T.S.

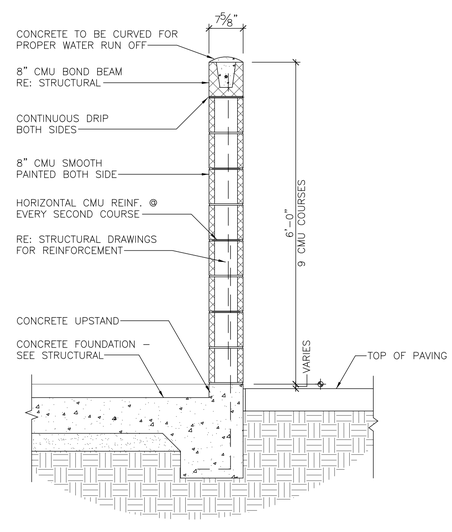

12 A1.2 TYPICAL DUMPSTER WALL SECTION

SCALE: N.T.S.

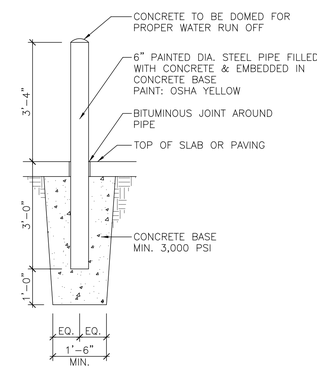

14 A1.2 TYPICAL BOLLARD DETAIL

SCALE: N.T.S.

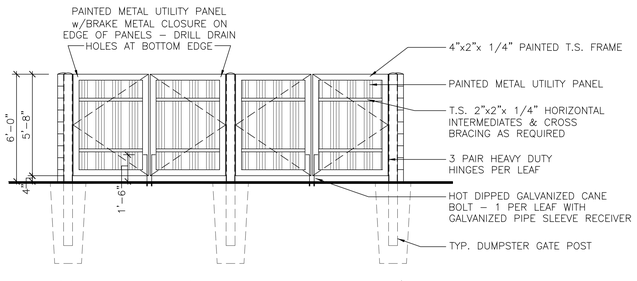

10 A1.2 DUMPSTER FRONT ELEVATION – w/GATE

SCALE: N.T.S.

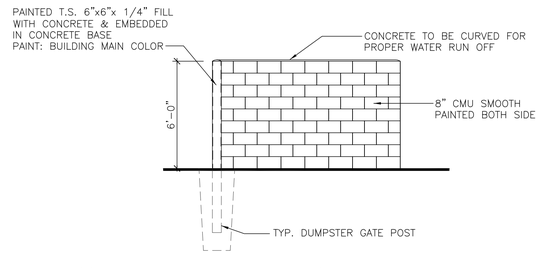

11 A1.2 DUMPSTER SIDE ELEVATION

SCALE: N.T.S.

1801
Job Number
KW
Drawn by
KW
Checked by
6/19/2018
Date
6/20/2018
Revised
Revised

17211 PAD SITE

17211 IH45, Houston, Texas 77090

OWNERSHIP OF DOCUMENTS

THIS DOCUMENT, AND THE IDEAS AND DESIGNS INCORPORATED HEREIN, AS AN INSTRUMENT OF PROFESSIONAL SERVICE, IS THE PROPERTY OF KENNETH WOO & ASSOCIATES AND IS NOT TO BE USED, IN WHOLE OR IN PART, FOR ANY OTHER PROJECT WITHOUT THE WRITTEN AUTHORIZATION OF KENNETH WOO & ASSOCIATES

©2018

REGISTERED ARCHITECT KENNETH WOO STATE OF TEXAS

6/20/2018

KWA

A1.2